DuraMAC™
HORIZONTAL MULTISTAGE CENTRIFUGAL PUMP

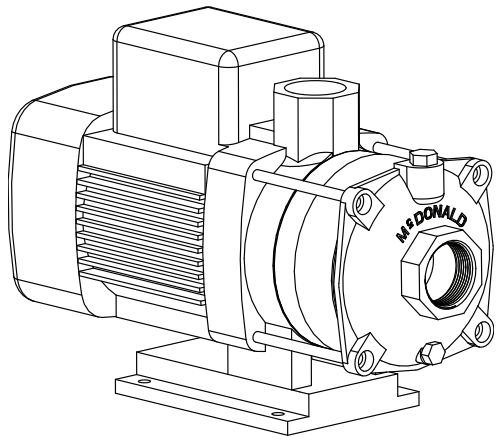

ATTENTION!
Important information for installers of this equipment!

This equipment is intended for installation by technically qualified personnel. Failure to install it in compliance with national and local electrical codes and with motor suppliers recommendations, may result in electrical shock or fire hazard, unsatisfactory performance, and equipment failure.

WARNING!

Serious or fatal electrical shock may result from failure to connect the motor, control enclosures, metal plumbing, and all other metal near the motor or cable, to the power supply ground terminal using wire no smaller than motor cable wires. To reduce risk of electrical shock, disconnect power before working on or around the water system.

CAUTION - This pump has been evaluated for use with water only.

WARNING - Risk of electric shock - This pump is supplied with a grounding conductor and grounding-type attachment plug. To reduce the risk of electric shock, be certain that it is connected only to a properly grounded, grounding-type receptacle.

GROUNDING & ELECTRICAL INSTALLATION

The pump is supplied with a 3-conductor grounding cord. Connect the cord only to a properly grounded, GFCI protected circuit. Do not lift the pump by the electrical cord.

Follow local and national plumbing, building and electrical codes when installing the pump.

Maintain this pump in compliance with the National Electrical Code (NEC) or the Canadian Electrical Code (CEC) and with all local codes and ordinances that apply. Consult your local building inspector for local code information.

Use copper conductors only, and be certain wire and fuses of the correct size are installed.
DO NOT GROUND TO GAS OR FUEL LINES

INSTALLATION & LOCATION

The pump is intended for indoor use only and should be installed in a dry, accessible area protected from freezing temperatures. Proper ventilation must be provided for proper cooling of the electrical equipment.

Follow local plumbing codes. In some cases a dual check valve, reduced pressure zone device, or other equipment may be required.

DuraMAC™ Model	Pump Boost	Voltage	Power
17044C070P-2	44 psi	230 60Hz	2 HP
17060C070P-2	60 psi	230 60Hz	2 HP

Do not spray water on or near the electric motor or control.

The pump should be permanently mounted on a solid and level foundation.

The location should be accessible for service, and sufficiently protected against flooding, freezing or excessive moisture.

Pump only water with this pump. Do not pump flammable liquids or chemicals. Do not use the pump near gas pilot lights or where chemical or gas fumes are present.

Use of an electric pump with liquids other than water or in an atmosphere containing chemical or gas fumes may ignite those liquids or gases and cause injury or death due to an explosion and/or fire.

Always install near a floor drain where leakage will not cause damage to homes or property.

WARNING: It is unlawful in **CALIFORNIA & VERMONT (effective 1/1/2010); MARYLAND (effective 1/1/2012); LOUISIANA (effective 1/1/2013) and the UNITED STATES OF AMERICA (effective 1/4/2014)** to use any product in the installation or repair of any public water system or any plumbing in a facility or system that provides water for human consumption if the wetted surface area of the product has a weighted average lead content greater than 0.25%. This prohibition does not extend to service saddles used in California, Louisiana or under USA Public Law 111-380.